Carr Hill Industrial Estate
Doncaster
DN4 8DE
01302 732600 | cva.noreply@cva-auctions.co.uk

VEHICLE INSPECTION REPORT

SL23HPE

DAF CF 450

Inspection

Serious Damage?	No

Vehicle

VAT	Plus VAT
V5	To Follow

Details

Reg. date	03/07/2023	**Colour**	WHITE	**Gearbox**	AUTOMATIC
Year	2023	**VIN**	XLRADM4100G424670	**Axle Combi**	8x4
Mileage	158,360 Km Warranted	**Body Style**	Tipper Grab	**Rear Suspension**	Steel
Fuel Type	Diesel	**MOT Due**	31/07/2026		
GVW	32000kg	**Cab Type**	DAY CAB		

WARNING LIGHT ON DASH PALFINGER EPSILON M125L CRANE (YEAR 2022) THOMPSON BODY, EDBRO TIPPING GEAR, SHEETING SYSTEM

Tyres

NSF	**NSI1**	**NSI2**	**NSI3**	**NSI4**
OSF	**OSI1**	**OSI2**	**OSI3**	**OSI4**
Spare	**NSO1**	**NSO2**	**NSO3**	**NSO4**
	OSO1	**OSO2**	**OSO3**	**OSO4**

Features

- Park assist camera
- Air conditioning

Photos

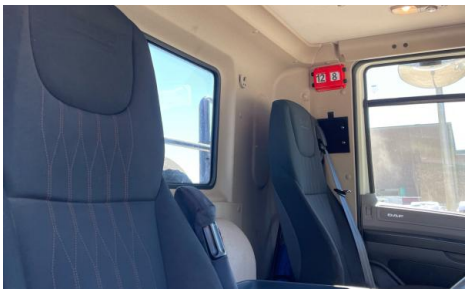

11 07. 0 0km/h
158361.0km
OK

SL23 HPE
DAF
DAF

DAF TRUCKS N.V.
64*2007/46*0013*
XLRADM4100G424670
DAF
Type: M4DN3

PALFINGER
Kübler
QUARTZ

PALFINGER
LUBRICANTS
PALFINGER Hydraulic Oil PREMIUM
PALFINGER Hydraulic Oil EXTREME
PALFINGER Hydraulic Oil BIO
Viscosity:
19 22 32 46 68
PALFINGER
CHECK
L.P.
PALFINGER
M125SL82
YCRANE_ON_1
1100093360
2022
IMPORTANT NOTICE

PALFINGER EPSILON

SAMSON

Condition Check

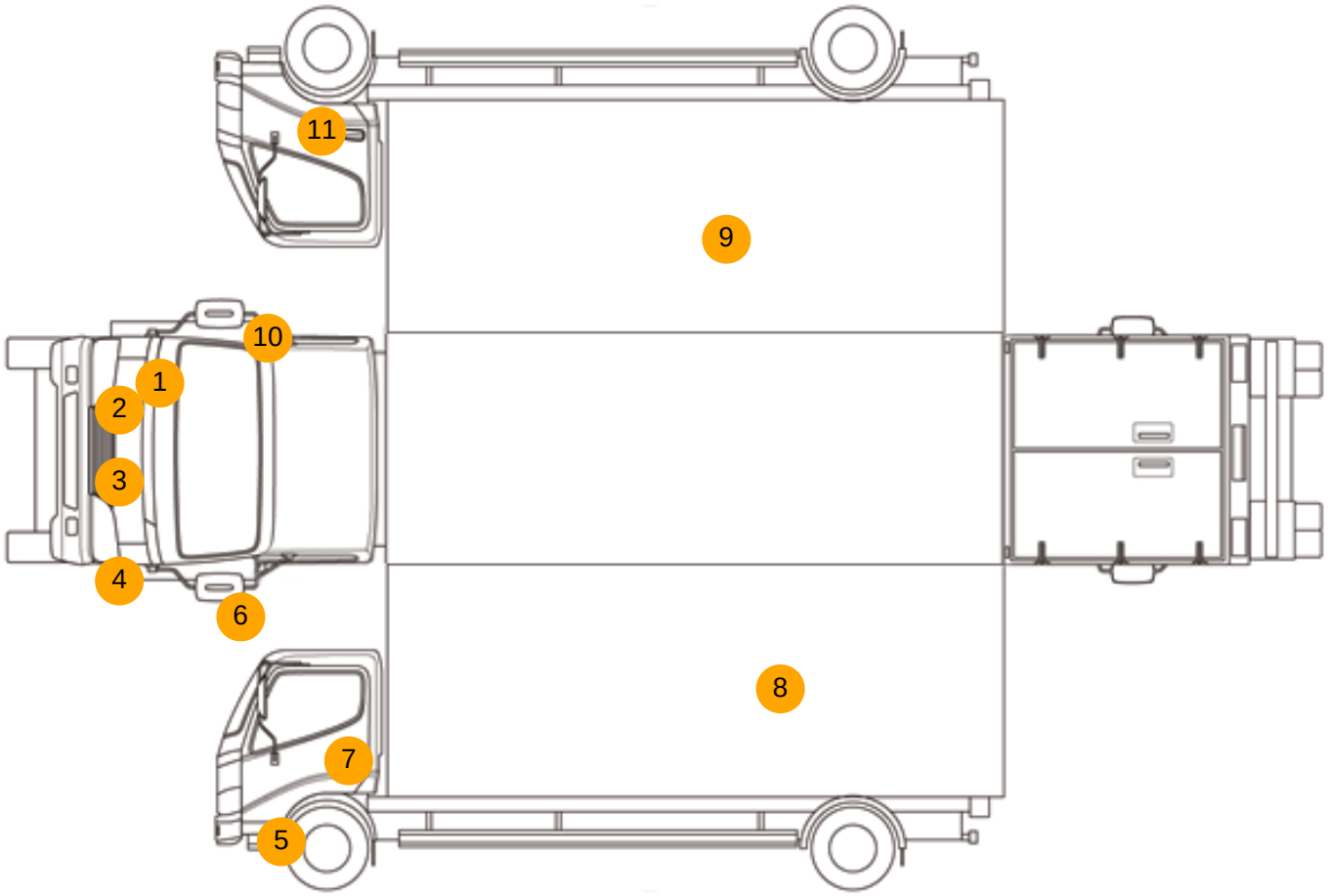

Damage Photos

1: Wing osf
Chipped
1 To 5

2: Bumper Front
Scratched
25 to 100mm Thru Paint

3: Bumper Front
Scratched
25 to 100mm Thru Paint

4: Bumper Front
Scratched
Over 100mm Thru Paint

5: Wing Front Arch Extension ns
Scratched (Painted)
Over 25mm Thru Paint

6: Door Mirror Assy nsf
Scuffed (Unpainted)
Over 100mm

7: Door nsf
Scratched
Over 25mm Not Thru Paint

8: Qtr Panel nsr
Dented
With Paint Damage

9: Qtr Panel osr
Dented
With Paint Damage

10: Door Mirror Assy osf
Scuffed (Unpainted)
Over 100mm

11: Wing Front Arch Extension os
Scuffed (Unpainted)
Over 100mm

Interior

Carpet Condition	Average	**Upholstery Condition**	Average
Seat Condition	Average	**Odour**	-

Engine Runs	OK	Gearbox 1st and Reverse Test	OK
Brakes	OK	Clutch Slip Test from Static	OK
Parking Brake	OK	Gearbox Static Gear Selection (engine running)	OK
		No Excessive Smoking	OK
EML light illuminated	OK	Oil warning light illuminated	OK
Airbag light illuminated	OK	DPF light illuminated	OK
ABS light illuminated	OK	Service indicator light illuminated	OK